MP7952 12V Rapid Air Compressor

1. TECHNICAL SPECIFICATION

Item No:	Voltage:	Rated Current:	Watt	Flow Rate:	Max. Pressure:	Sound Pressure	Sound Power
MP7952	12V - DC	12A	140	25L/Min.	150 psi	<75.2 dB(A)	<95.2dB (A)

2. PRODUCT SPECIFICATION

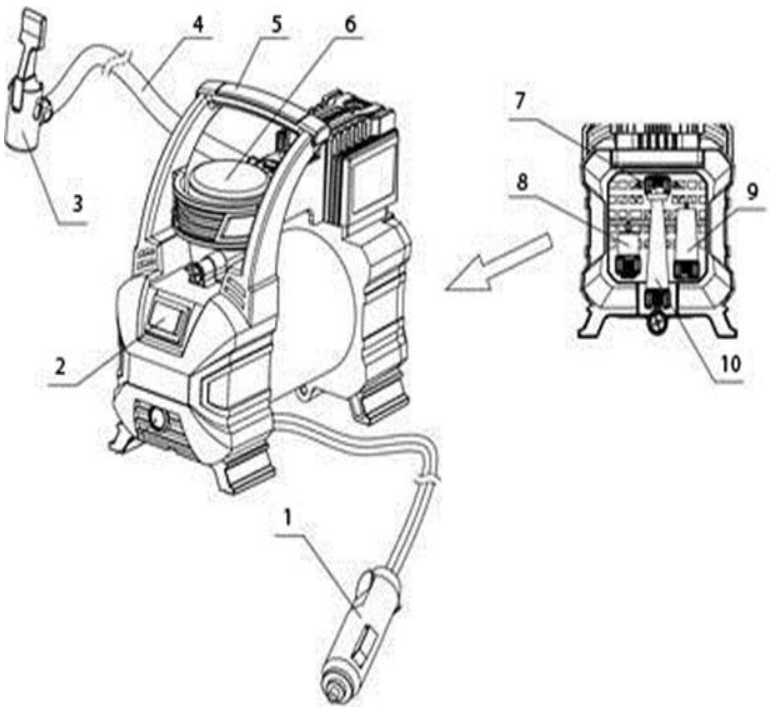

1. 12 V DC vehicle adapter
2. Power switch
3. Quick Coupler
4. High-pressure hose
5. Handle
6. Pressure gauge
7. Inflator needle valve
8. Brass coupler adapter
9. Short tapered nozzle
10. Standard tapered nozzle

MP7952 12V Rapid Air Compressor

3. INTENDED USE

Your analogue compressor is designed to be used from the standard 12V dc socket in most vehicles, to inflate car and bike tyres, balls, etc. This product is intended for consumer use only.

4. SAFETY

⚠WARNING

- **Read all safety warnings and all instructions.**
- Save all warnings and instructions for future reference.

Work area safety

- Keep work area clean and well lit. Cluttered or dark areas invite accidents.
- Do not operate compressor in explosive atmospheres, such as in the presence of flammable liquids, gases or dust. Power tools create sparks which may ignite the dust or fumes.
- Keep children and bystanders away while operating the compressor. Distractions can cause you to lose control.
- The plug must match the outlet. Never modify the plug in any way.
- Do not expose the compressor to rain or wet conditions. Water entering the compressor will increase the risk of damage.
- Do not use if the Power switch ② does not turn the compressor on and off.
- Disconnect the plug from the power source tool before making any adjustments, changing accessories, or storing power tools. Such preventive safety measures reduce the risk of starting the power tool accidentally.
- Store compressor out of the reach of children and do not allow persons unfamiliar with the compressor or these instructions to operate the compressor.
- Always check the compressor before use. If damaged, or worn, do not use.

Device-specific safety instructions

- This appliance may not be used by children or people with reduced physical, sensory or mental capabilities or a lack of experience and knowledge. Children must not use the appliance as a plaything. Cleaning and user maintenance tasks may not be carried out by children unless they are supervised.
- Avoid using the compressor at temperatures below +5C degrees.
- Never leave the compressor unsupervised while it is in use.
- Ensure that the Power switch ② is turned off when connecting to the power supply.
- Caution! Operate the compressor only for a short time. The appliance may overheat if operated continuously for longer than 10 minutes. Switch the appliance off immediately and allow it to cool down for at least 10 minutes.
- **Risk of injury!** Do not inflate any objects to more than the intended pressure. They could burst and cause injury and/or material damage.
- Do not exceed the permissible output range of the compressor. Do not pump up any lorry, tractor or other large or high pressure tyres.
- Never use the appliance for purposes other than the ones for which it was designed.
- The appliance must always be kept clean, dry and free from oil or grease.
- Stay alert, do not use a power tool while you are tired or under the influence of drugs, alcohol or medication.
- Use personal protective equipment. The use of personal protective equipment such as Eye protection and hearing protection is recommended.
- Prevent unintentional starting. Ensure the switch is in the off-position before connecting to power source, picking up or carrying the tool.
- Remain alert at all times! Never use the appliance when you are distracted or don't feel well.
- Do not carry the appliance by the power cord and never hang it up by the power cord. Always route the power cord away from the appliance to the rear.
- **Keep cord away from heat, oil, sharp edges and moving parts. Do not use if the cord is worn or damaged.**
- The compressor and hoses can get very hot during operation. Touching them can cause burns.
- When removing the quick coupler, always hold the hose coupling firmly to avoid injury caused by the hose flying off.
- Allow sufficient cooling time before storing the compressor.
- All parts are lifetime lubricated, and no oiling is required.
- To avoid low voltage of auto battery, please have the engine running when using the air compressor.
- Be sure the unit's power switch is in the OFF (3) position when not in use.

MP7952 12V Rapid Air Compressor

5. OPERATION

USE OF ACCESSORIES For Inflatable Objects Including Bicycle Tires, Rafts, Air Beds, and Sports Balls:

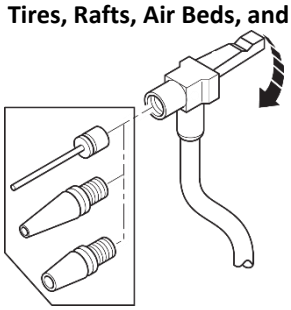

Your inflator is supplied with the standard tapered nozzles, valve adaptor and the needle inflator nozzle⑦⑧⑨⑩, these are located in a recess at the end of the unit.

• Start your vehicle's engine, then plug the compressor's 12V DC Adaptor ① into the battery.

• To use the Quick Coupler ③, make sure that the lever is in the up position.

• Place the Quick Coupler over the stem of the inflation needle or tapered nozzle.

• Press the lever on the Quick Coupler down to lock it in place.

• Place the inflation needle or tapered nozzle into the item to be inflated.

To start the inflator press the Power switch ②to the ON position.

• When the item is inflated to desired firmness or pressure, or to stop the inflator at any time press the Power switch ② to the OFF position.

USING THE INFLATOR AS A PRESSURE GAUGE

• Connect the quick coupler ③ to the item to be checked.

• The gauge will display the items pressure.

• After checking, return the air hose to the storage location.

OPERATION: For the inflation of Vehicle Tyres.

• Before use, check the manufacturers recommended tyre pressures for the vehicle.

• To avoid low voltage of auto battery, please have the engine running when using the air compressor.

• Plug the 12V DC vehicle adaptor ① into the vehicle accessory socket.

• Connect the quick coupler ③ directly to the valve of the tyre to be inflated, pressing down the lever of the quick coupler to lock it in place.

• To start the inflator press the Power switch ② to the on position.

• When the item is inflated to the correct pressure or to stop the inflator at any time press the main switch ② to the off position.

• Raise the lever of the Quick coupler and remove from the valve.

⚠ **WARNING:** Never leave inflator running unattended, it can burst car tyres and other items.

6. MAINTENANCE

The only user serviceable part is a 15Amp fuse located I the 12V connector, this can be checked by unscrewing the spring loaded centre pin from the plug. Only replace with a fuse with identical ratings. Make sure that the machine is not live when carrying out maintenance work. Regularly clean the machine housing with a soft cloth, preferably after each use. Keep the ventilation slots free from dust and dirt. If the dirt does not come off use a soft cloth moistened with soapy water. Never use solvents such as petrol, alcohol, ammonia water, etc. These solvents may damage the plastic parts.

All parts are lifetime lubricated, and no additional oiling is required.

7. ENVIRONMENTAL PROTECTION

Most of the packaging materials used to protect this machine can be recycled. Take these materials to the appropriate recycling locations.

Discarded electric appliances are recyclable and should not be discarded in the domestic waste! Please actively support us in conserving resources and protecting the environment by returning this appliance to registered waste collection centres (if available).

MP7952 12V Rapid Air Compressor

We declare under our sole responsibility that this product is in conformity with the following standards or standardized documents: EN1012-1:2010; EN60204-1:2006/A1:2009; EN55014-1:2006/A2:2011;EN55014-2:2015; EN61000-3-2:2014;EN61000-3-3:2013; in accordance with the regulations 2006/42/EEC, 2014/30/EEC.

Technical Manager

Maypole Ltd Sept 2018